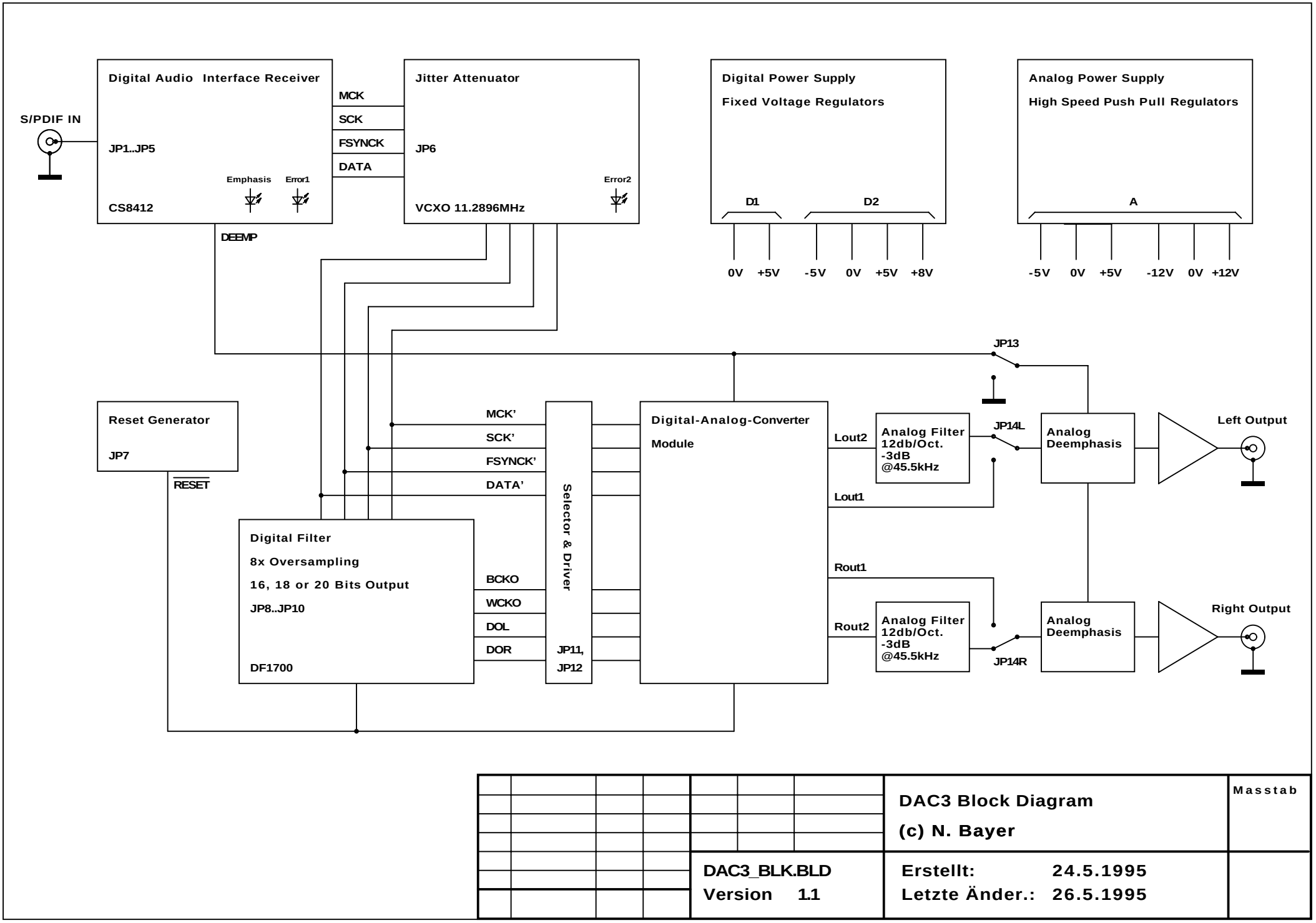
Digital Audio Interface Receiver
JP1..JP5
CS8412
Emphasis
Error1
S/PDIF IN
MCK
SCK
FSYNCK
DATA
Jitter Attenuator
JP6
VCXO 11.2896MHz
Error2
DEEMP
Digital Power Supply
Fixed Voltage Regulators
D1
D2
0V +5V -5V 0V +5V +8V
Analog Power Supply
High Speed Push Pull Regulators
A
-5V 0V +5V -12V 0V +12V
JP13
Reset Generator
JP7
RESET
MCK'
SCK'
FSYNCK'
DATA'
Selector & Driver
JP11,
JP12
Digital-Analog-Converter
Module
Lout2
Lout1
Rout1
Rout2
Analog Filter
12db/Oct.
-3dB
@45.5kHz
JP14L
JP14R
Analog
Deemphasis
Left Output
Right Output
Digital Filter
8x Oversampling
16, 18 or 20 Bits Output
JP8..JP10
DF1700
BCKO
WCKO
DOL
DOR
DAC3 Block Diagram
(c) N. Bayer
Masstab
DAC3_BLK.BLD
Version 1.1
Erstellt: 24.5.1995
Letzte Änder.: 26.5.1995

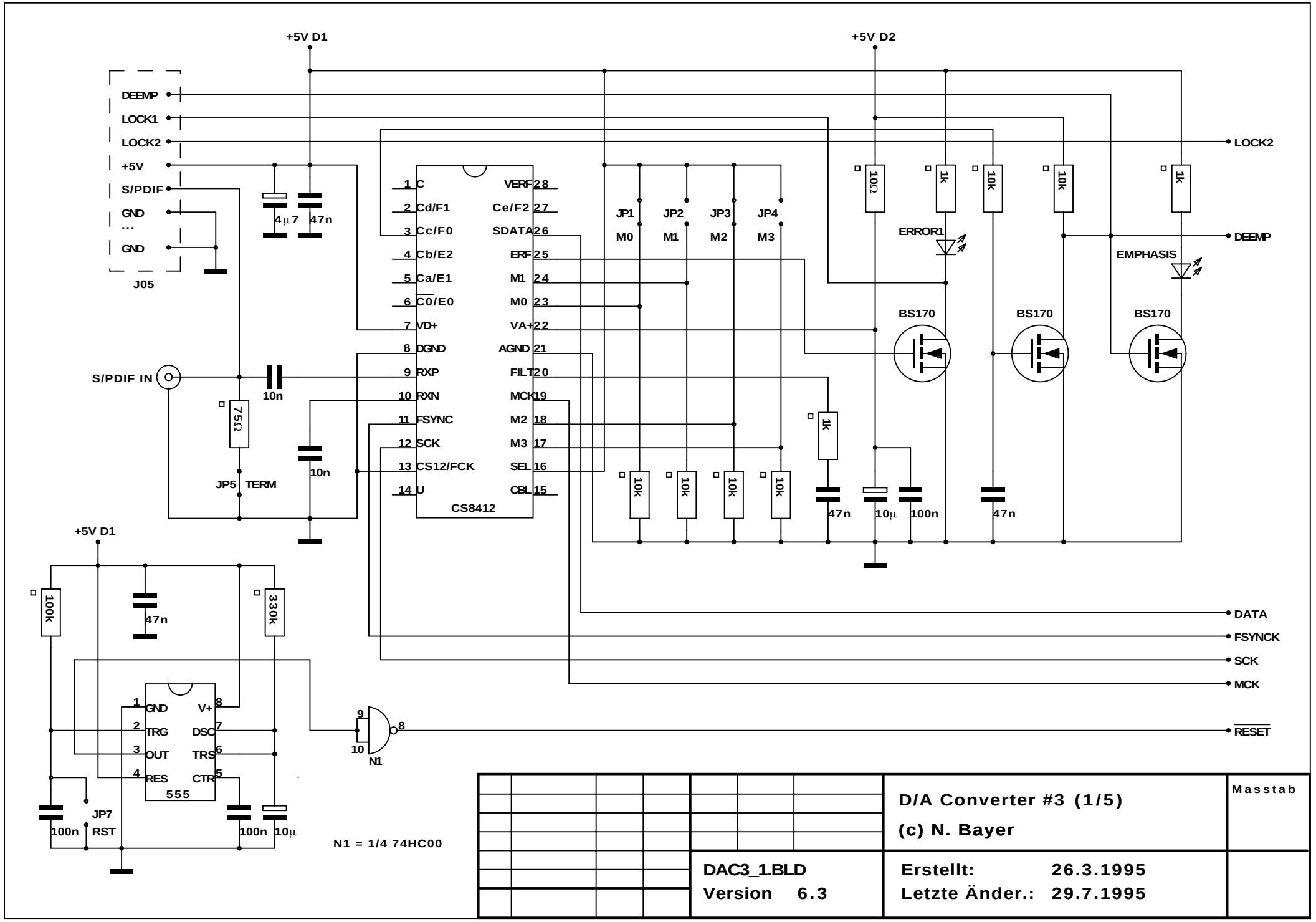
+5V D1
+5V D2
DEEMP
LOCK1
LOCK2
+5V
S/PDIF
GND
...
GND
J05
4µ7
47n
S/PDIF IN
10n
75Ω
JP5 TERM
10n
1 C
2 Cd/F1
3 Cc/F0
4 Cb/E2
5 Ca/E1
6 C0/E0
7 VD+
8 DGND
9 RXP
10 RXN
11 FSYNC
12 SCK
13 CS12/FCK
14 U
VERF 28
Ce/F2 27
SDATA 26
ERF 25
M1 24
M0 23
VA+ 22
AGND 21
FILT 20
MCK 19
M2 18
M3 17
SEL 16
CBL 15
CS8412
JP1 M0
JP2 M1
JP3 M2
JP4 M3
10k
10k
10k
10k
1k
47n
10µ
100n
47n
10Ω
1k
10k
10k
1k
ERROR1
EMPHASIS
BS170
BS170
BS170
LOCK2
DEEMP
DATA
FSYNCK
SCK
MCK
RESET
+5V D1
100k
47n
330k
1 GND
2 TRG
3 OUT
4 RES
V+ 8
DSC 7
TRS 6
CTR 5
555
JP7
100n
RST
100n
10µ
9
10
8
N1
N1 = 1/4 74HC00
D/A Converter #3 (1/5)
(c) N. Bayer
Masstab
DAC3_1.BLD
Version 6.3
Erstellt: 26.3.1995
Letzte Änder.: 29.7.1995

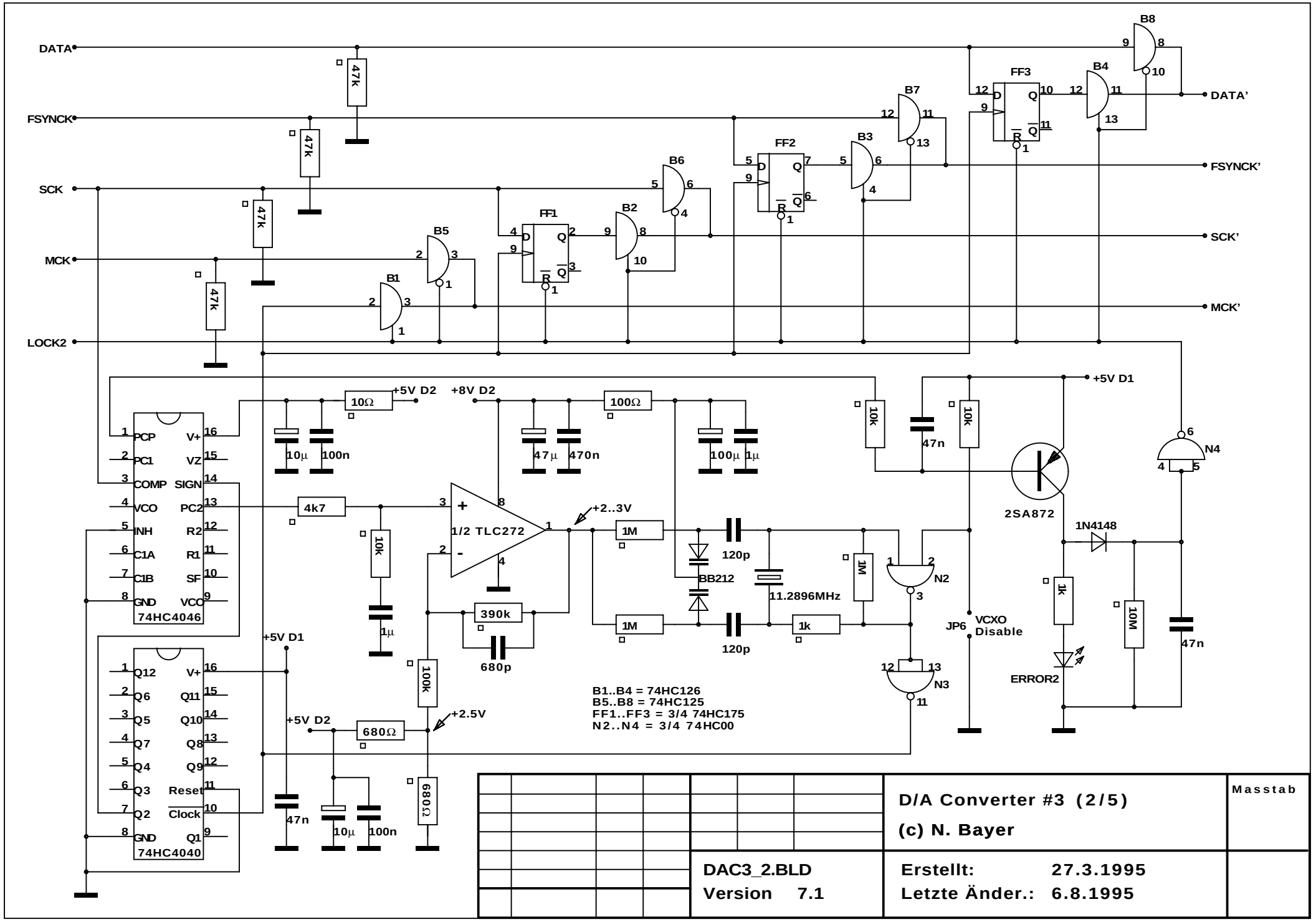
DATA
FSYNCK
SCK
MCK
LOCK2
DATA'
FSYNCK'
SCK'
MCK'
47k
B1
B2
B3
B4
B5
B6
B7
B8
FF1
FF2
FF3
+5V D2
+8V D2
+5V D1
10Ω
100Ω
10µ
100n
47µ
470n
100µ
1µ
10k
47n
4k7
1/2 TLC272
+2..3V
1M
120p
BB212
11.2896MHz
1k
390k
680p
100k
680Ω
+2.5V
2SA872
1N4148
N2
N3
N4
JP6
VCXO
Disable
ERROR2
10M
74HC4046
74HC4040
PCP
PC1
COMP
VCO
INH
C1A
C1B
GND
V+
VZ
SIGN
PC2
R2
R1
SF
VCO
Q12
Q6
Q5
Q7
Q4
Q3
Q2
Q11
Q10
Q8
Q9
Reset
Clock
Q1
B1..B4 = 74HC126
B5..B8 = 74HC125
FF1..FF3 = 3/4 74HC175
N2..N4 = 3/4 74HC00
D/A Converter #3 (2/5)
(c) N. Bayer
Masstab
DAC3_2.BLD
Version 7.1
Erstellt: 27.3.1995
Letzte Änder.: 6.8.1995

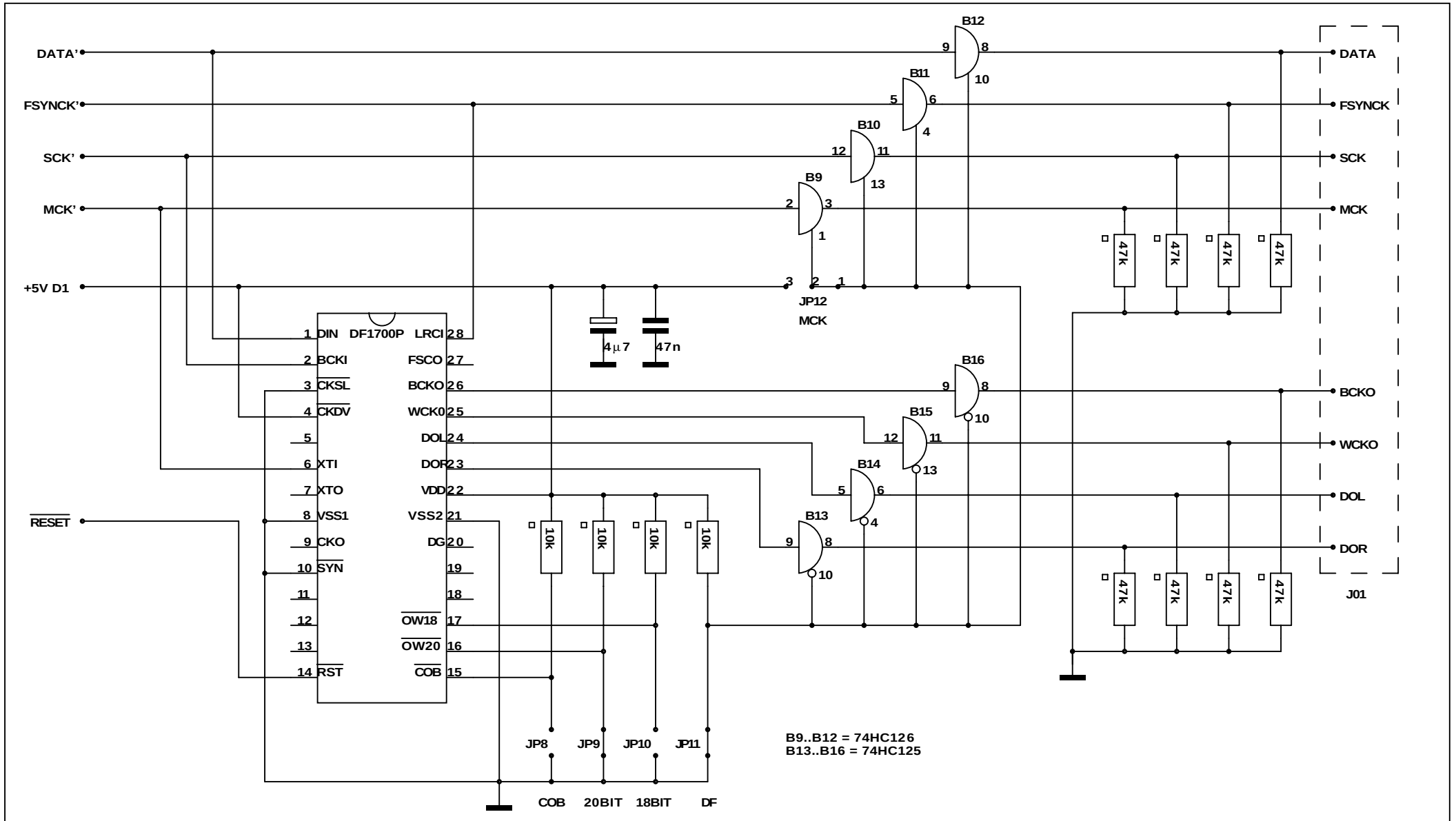

D/A Converter #3 (3/5) (c) N. Bayer		Masstab
DAC3_3.BLD Version 6.9	Erstellt: 28.3.1995 Letzte Änder.: 30.8.1995	

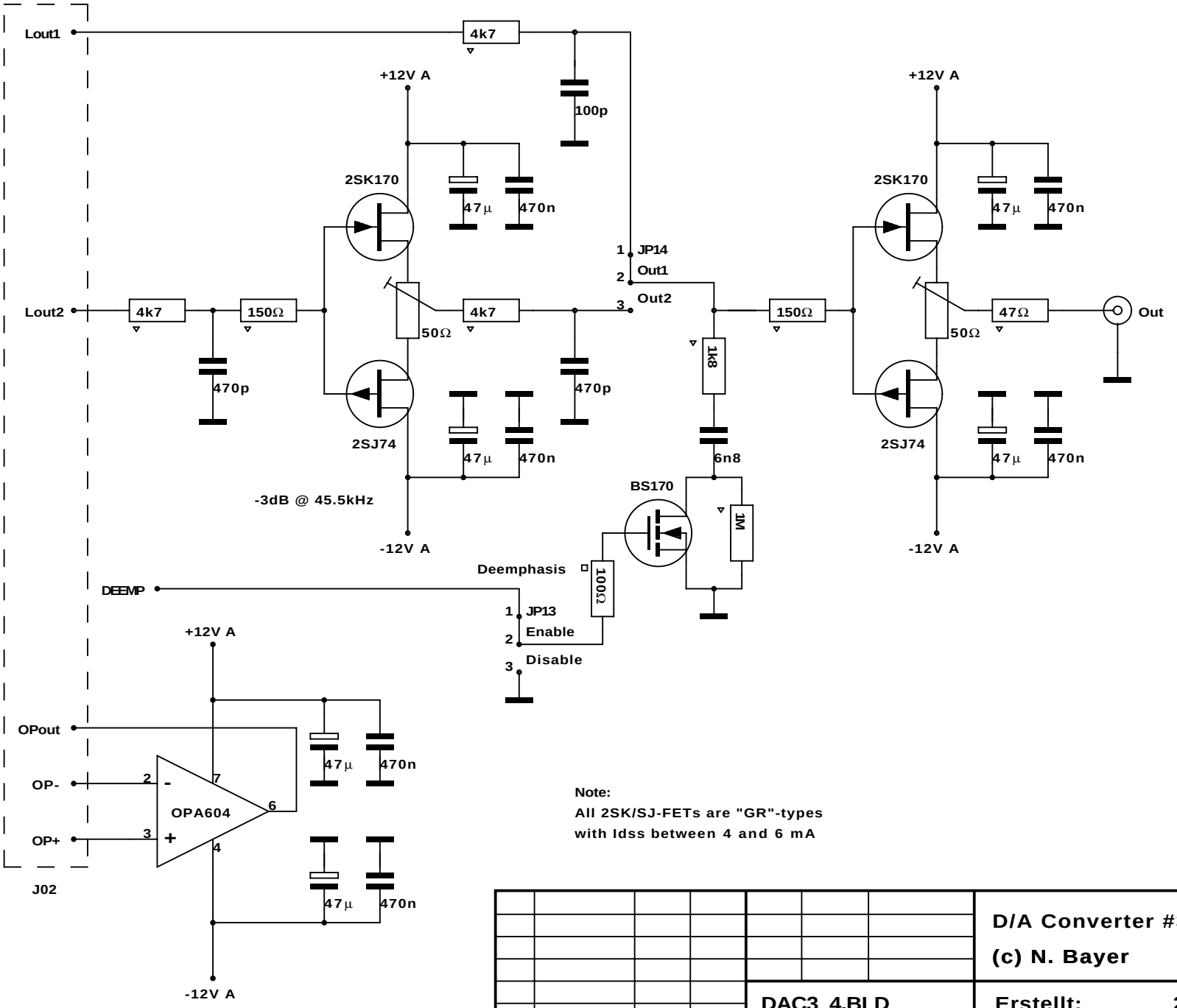

Note:
All 2SK/SJ-FETs are "GR"-types
with Idss between 4 and 6 mA

D/A Converter #3 (4/5) (c) N. Bayer			Masstab
DAC3_4.BLD Version 7.3	Erstellt: 28.3.1995 Letzte Änder.: 30.8.1995		

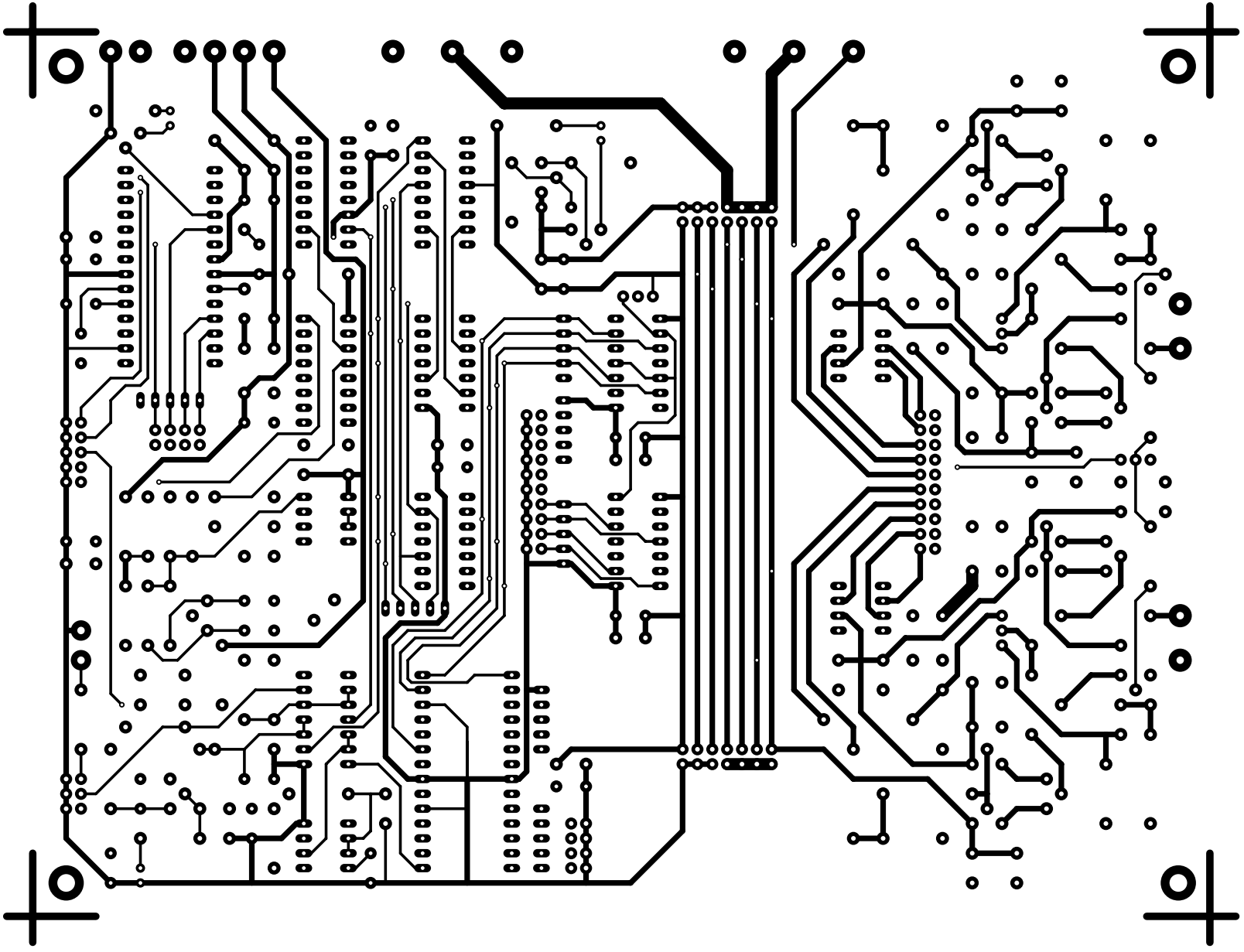

	D/A Converter #3 Rev. A (c) N. Bayer		Masstab 1:1
DAC3.BLD Version 2.0	Erstellt: 15.3.1995 Letzte Änder.: 6.8.1995		

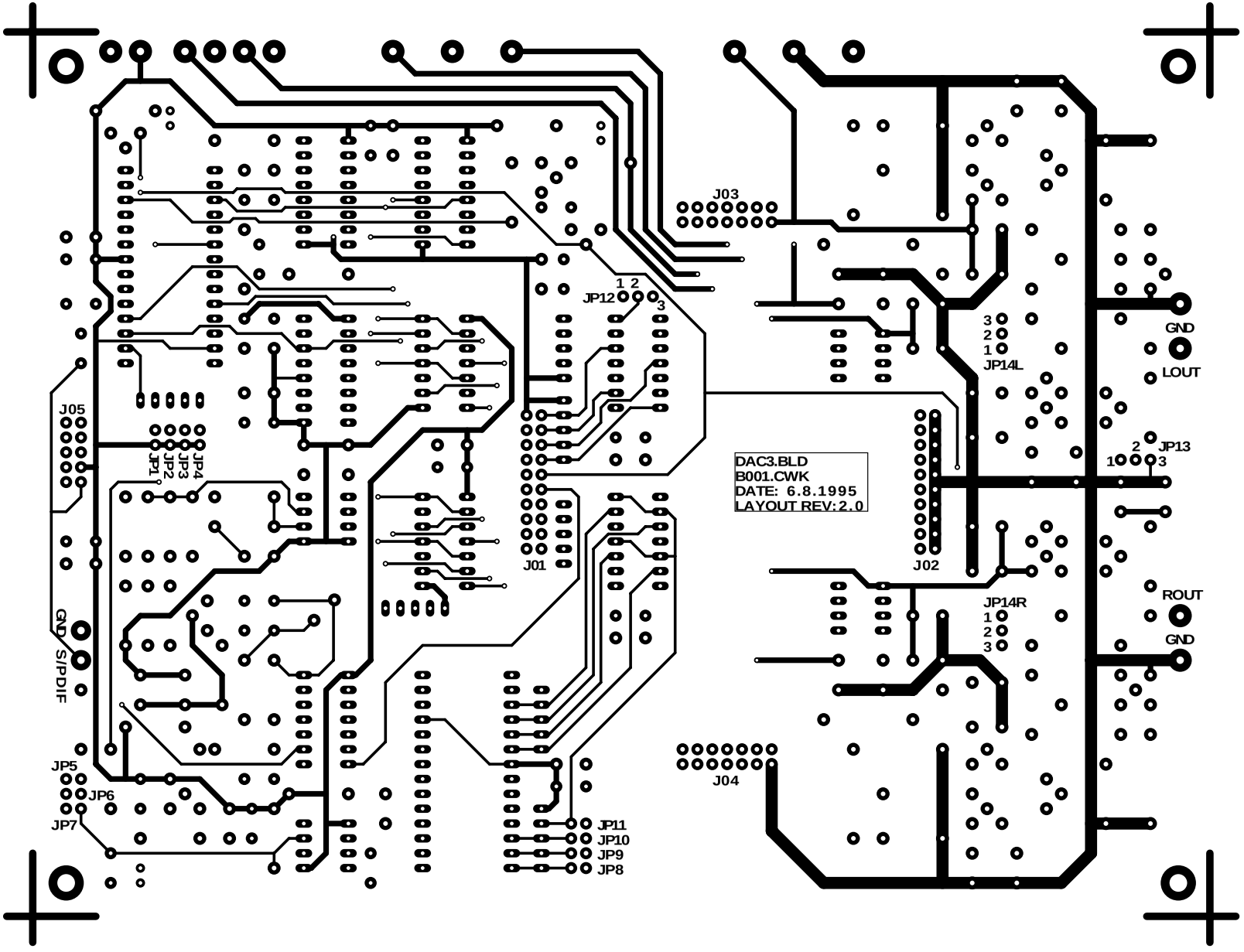

								D/A Converter #3 Rev. A (c) N. Bayer	Masstab 1:1
								DAC3.BLD Version 2.0	Erstellt: 15.3.1995 Letzte Änder.: 6.8.1995

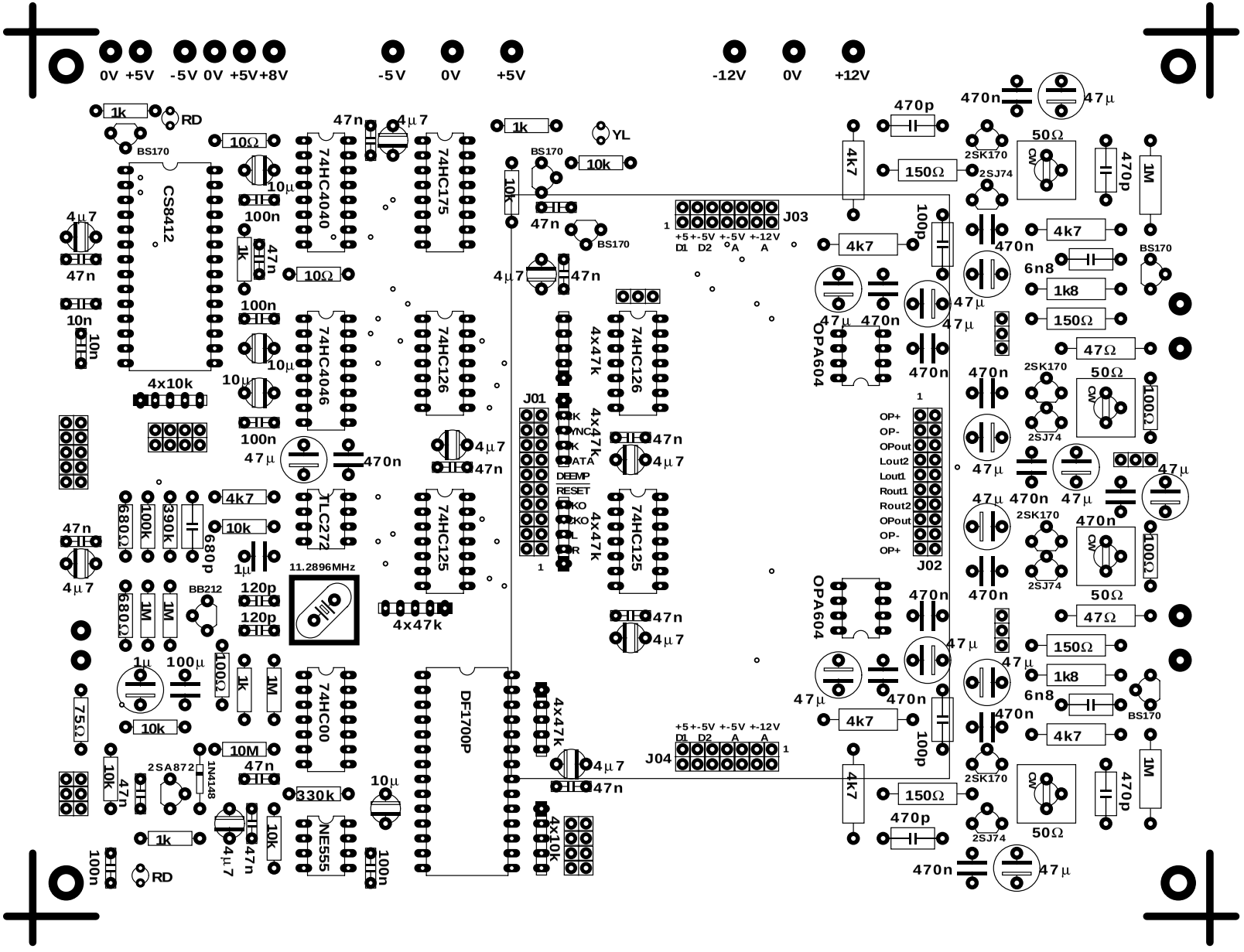
0V +5V -5V 0V +5V +8V
-5V 0V +5V
-12V 0V +12V
CS8412
74HC4040
74HC175
74HC4046
74HC126
74HC125
TLC272
74HC00
DF1700P
NE555
OPA604
J01
J02
J03
J04
11.2896MHz
BS170
2SK170
2SJ74
2SA872
BB212
1N4148
RD
YL
DEEMP
RESET
OP+
OP-
OPout
Lout2
Lout1
Rout1
Rout2
+5 +-5V +-5V +-12V
D1 D2 A A

| | | |

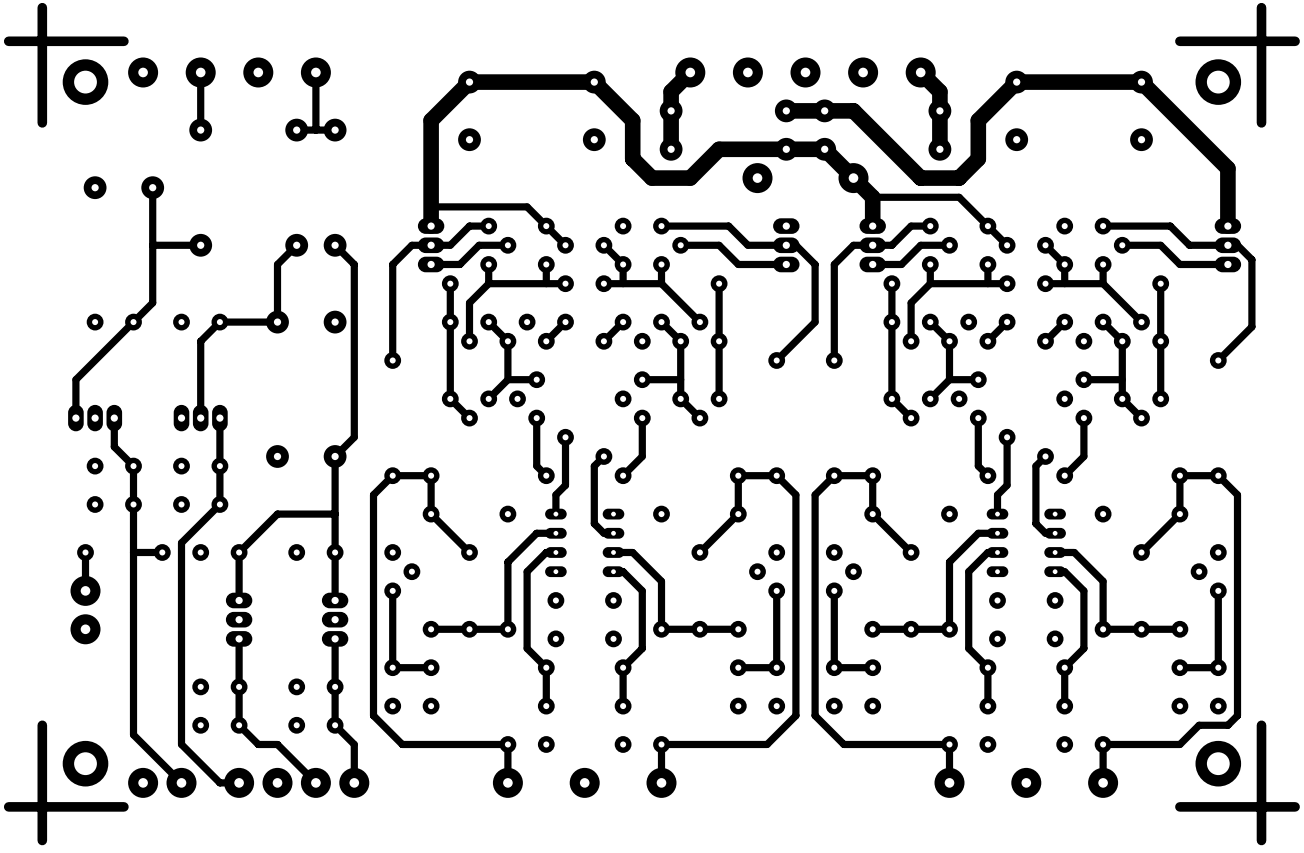

	DAC3 Power Supply (c) N. Bayer		Masstab 1:1
DAC3_POW.BLD Version 1.2	Erstellt: 30.3.1995 Letzte Änder.: 16.11.1997		

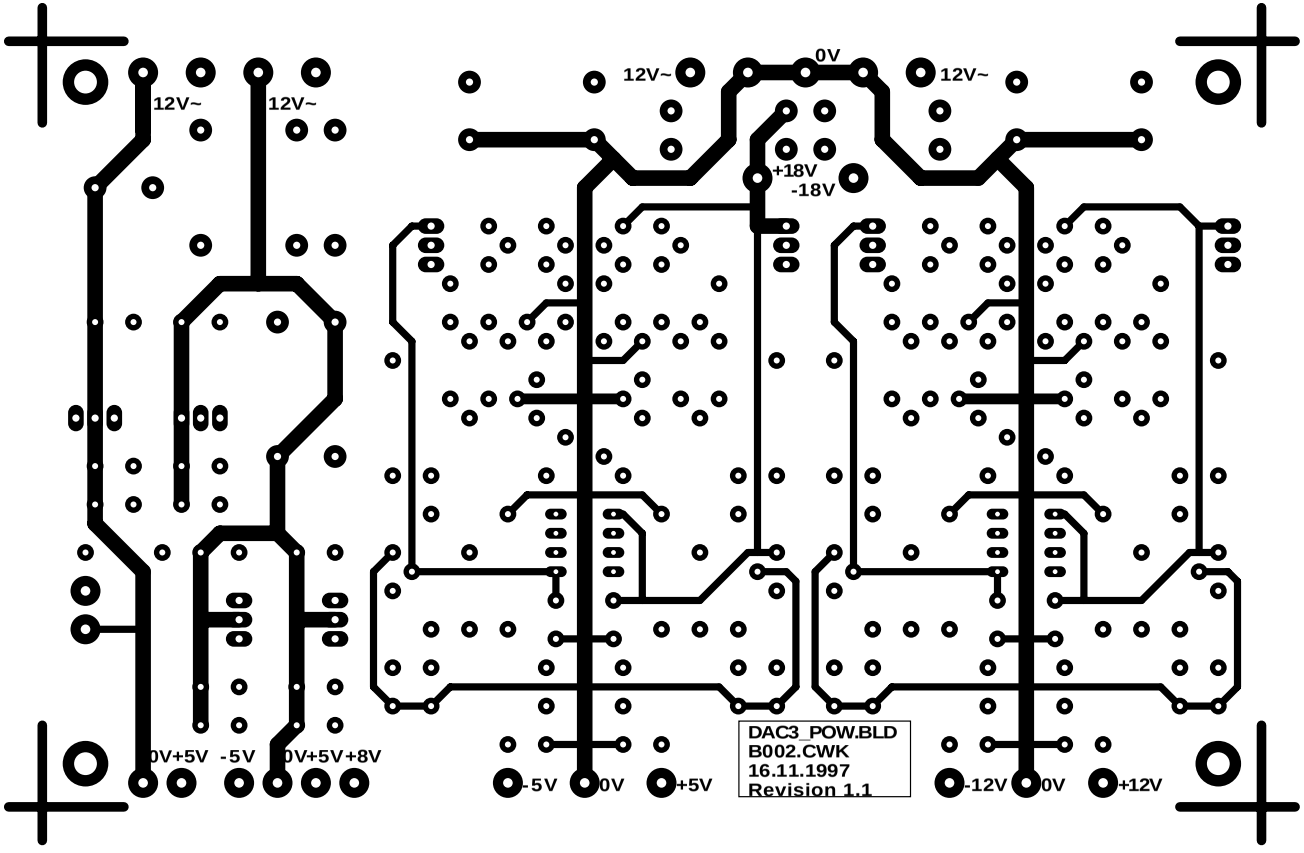

	DAC3 Power Supply (c) N. Bayer	Masstab 1:1
DAC3_POW.BLD Version 1.2	Erstellt: 30.3.1995 Letzte Änder.: 16.11.1997	

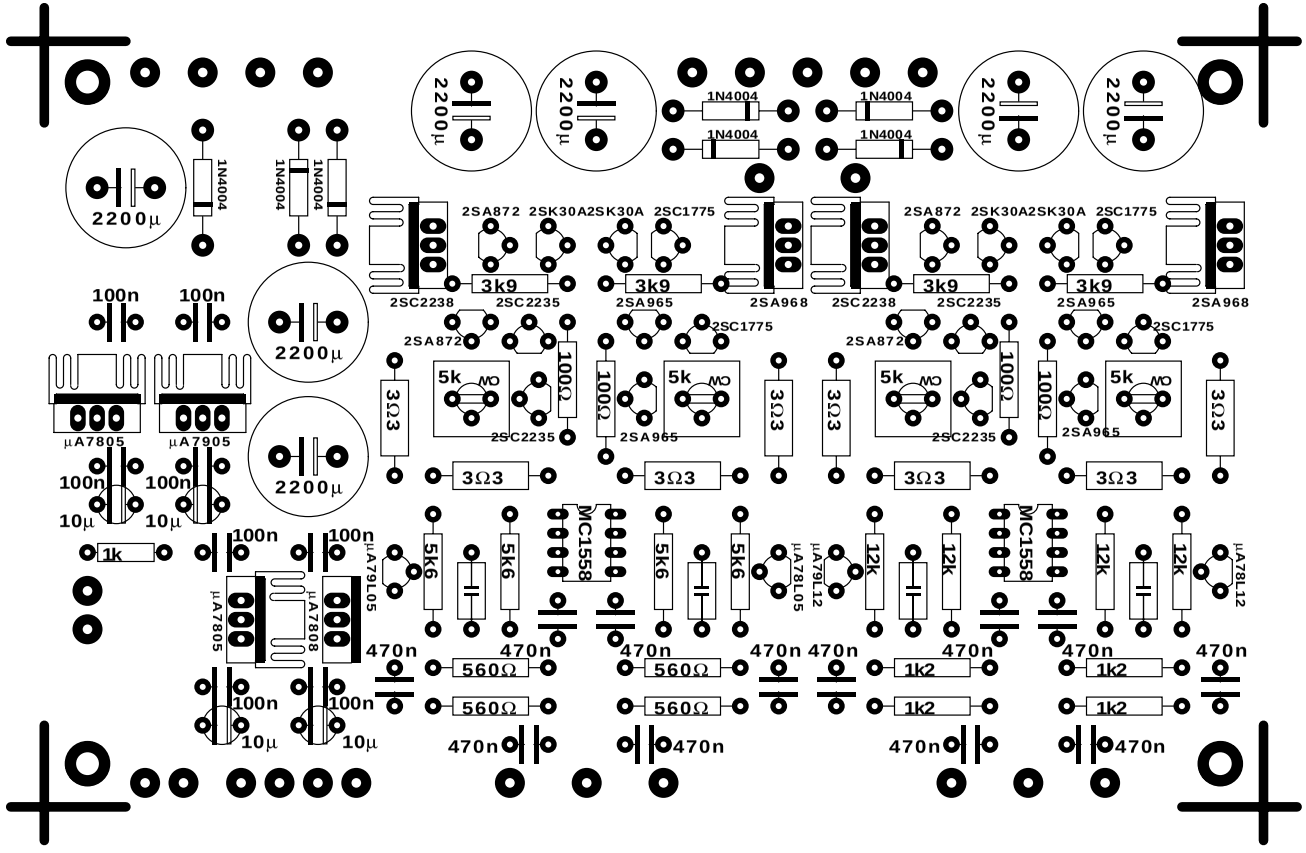

DAC3 Power Supply (c) N. Bayer			Masstab 1:1
DAC3_POW.BLD Version 1.2	Erstellt: 30.3.1995 Letzte Änder.: 16.11.1997		